PRODUCT SHEET

Description:
Adjustable Stand-Off Glass Adapter,SS316,Brushed,ø50x10mm,F/ 8-20mm. Glass, W/M10x50mm Threaded Rod, Drill Hole ø14mm

Item number:
22.10.477-0

Units	Box	Carton	HS Code	Barcode
Pcs.	4	40	8302419000	5704866503419

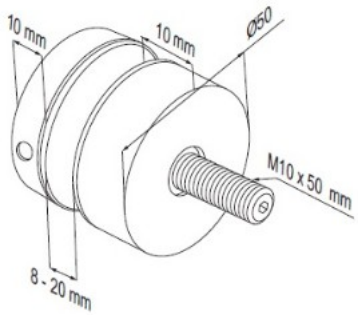

SISO A/S
Mileparken 11
DK-2740 Skovlunde
Denmark
VAT: DK 24786013

Phone +45 45 830 900

www.siso.dk
siso@siso.dk

Danske Bank
Nytorv Branch
Copenhagen
SWIFT: DABADKKK

Account no.
4180 3112 112936
IBAN Account
DK7230003112112936